Chapter 13

Laser Power and Temperature Control Loops

Chapter 12 provided extensive explanation about automatic gain control (AGC) topologies for RF leveling in both methods, feedforward (FF) and traditional feedback. It was explained that amplitude control using the feedback approach is a linear approximation around the operating point to which the leveling system is locked. Amplitude control is used in signal-leveling systems such as receive systems, whereas AGC is used in transmit systems where automatic level control (ALC) is used. Additional amplitude leveling systems using feedback are the optical power control for stabilizing the emitted power from a laser. This system is called automatic power control (APC) loop for power control. An additional control system utilizing feedback is for leveling the amount of cooling of a laser, using thermoelectric cooler (TEC) to achieve tight wavelength control. This is required for DWDM systems per the international telecommunications union (ITU) grid specifications as provided in Chapter 1.[6] In TEC loop, the temperature is controlled for wavelength stabilization as well as for optimizing the laser environmental conditions. Temperature control is done in order to deliver the required optical power in community access television (CATV) transmitters and WDM under extreme ambient conditions. The RF power leveling used in AGC is dual to a TEC loop, where RF power is equivalent to the heat capacity denoted as Q. In APC, RF power is dual to optical level. In this short chapter, analogies to AGC models are provided as well as an introduction to APC and TEC loop concepts. Many of these TECs and APC commercial controllers are available. Both TEC and APC loops in current advanced small-form pluggable (SFP) and analog designs are realized by using microcontrollers. TEC controllers and APC controllers are part of laser drivers, and loop filter implementations are done in software. However, it is beneficial to understand the design considerations of these kinds of loops. This short chapter is intentionally placed after Chapter 12 and provides a review about APC and TEC loops used for both analog and digital applications.

13.1 Automatic Power Control Loop

Laser power control in digital transmission is composed of two power control loops. The first loop controls the average power transmitted from the laser. The second loop controls the peak power level. As a consequence, by applying the two loops simultaneously, the peak power is maintained at a constant level as well as the average. In this manner, power stability and extinction ratio (ER) stability are accomplished (see Sec. 6.9 for definitions of ER). Note that since the average power level is the half value of the ER, setting the average and the peak power level defines ER. Generally, the optical power monitoring of a laser is done by the back-facet monitor photodiode. The back-facet monitor samples a portion of the average optical power and provides a feedback current to the control loop. Power monitor systems such as AGC, APC, and even TEC loops are slow systems, since the power changes are slow and vary over time, which is the reason for their narrow bandwidth (BW) loop of a few hertz. Therefore, the back-facet monitor photodetector has a relatively large diameter, since power control loops are slow systems. Figure 13.1 illustrates a typical concept of APC loop and peak power loop.

The peak power control loop is a faster loop that measures the optical peak level using RF peak detection. The RF peak detection controls the modulation depth, which is the ER. The modulation depth is determined by the drive current provided to the laser by the laser driver.

There are several key design considerations related to the APC loop. These design considerations are related to the data pattern and APC loop BW. Assume a case of digital transmission of long patterns with the same consecutive logic levels of either high level when the laser illuminates or low levels where the laser is dark and biased to its threshold. The APC loop should keep the same optical average power level without being driven to overcompensation. Hence, the loop BW or step response should be slower than the equivalent 50% duty cycle signal equal to those long consecutive bits having the same logic level. For instance, a gigabit $2^{23}-1$ pattern with 23 consecutive bits at "0" state and 23 consecutive bits at "1" state creates an equivalent 50% duty cycle signal at the frequency of 1 GHz/46, which is 21.7 MHz. The problem of such long patterns starts to affect APC loops at lower data rates. For instance, a 154.44 MB/s OC-3 with the same pattern would generate an equivalent signal of 3.35 MHz. As a result, wide band APC loop would start to follow the optical envelop rather than averaging. This problem is similar to AGC system applied on modulated signal. Thus, APC loop should be a slow narrow BW feedback control system. A good engineering practice would be to design the APC BW to be 10% of the lowest optical data rate, which results in equivalent 50% duty cycle created by train pattern of identical consecutive bits.

In conclusion, in both cases of AGC and APC, the control loops should be transparent to the AM-modulated signal. In other words, the rule of thumb is that the lowest AM modulation rate should be higher by at least 10 times (order of magnitude) than the AGC and APC loop 3 dB cutoff frequency.

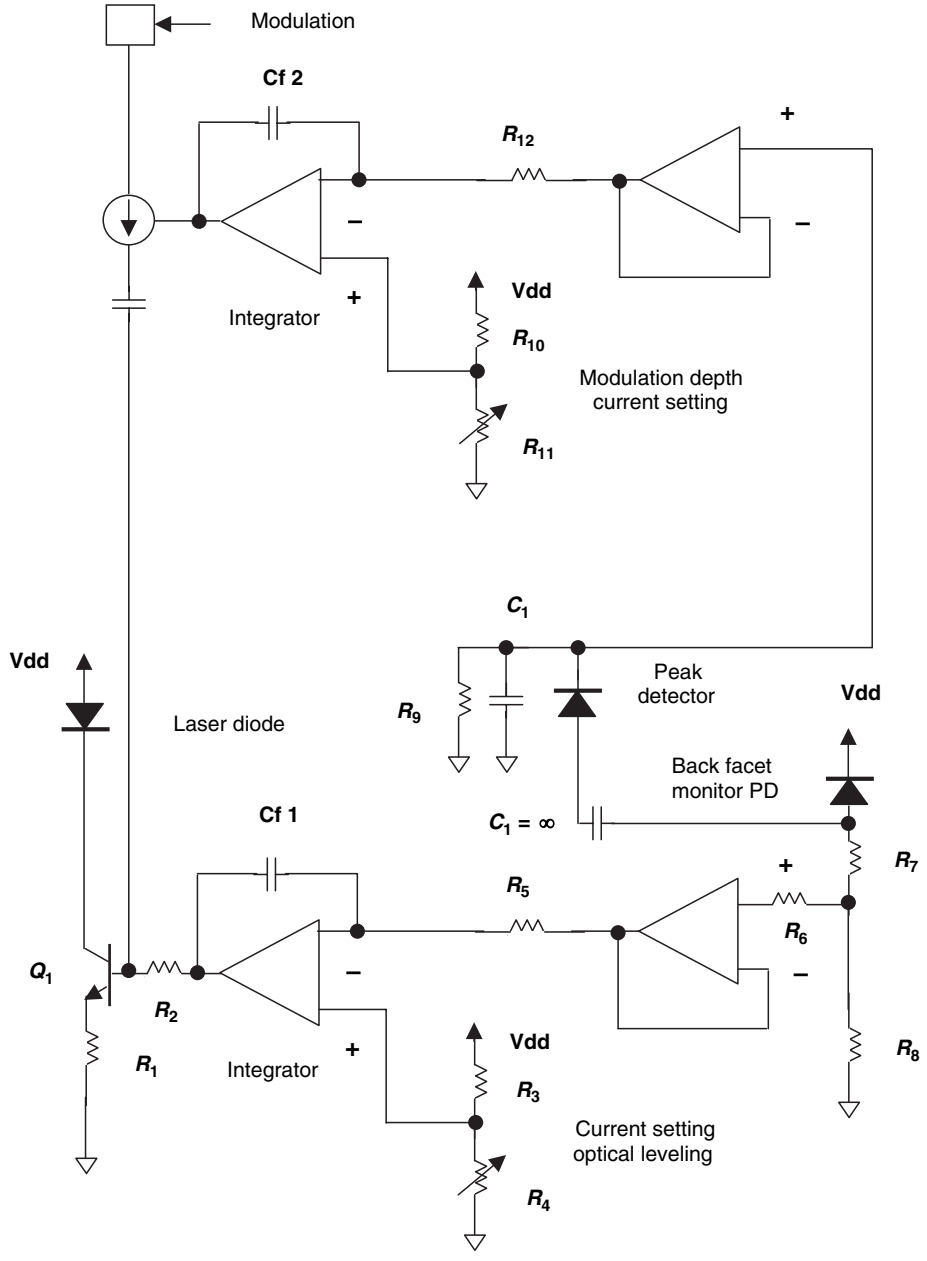

Figure 13.1: Concept of APC loop with option for ER control.

In order to calculate the APC transfer function, there is a need to find the ratio between the laser output power fluctuations over time and the control current or bias current fluctuations. The calculation and analysis process is similar to the feedback AGC analysis presented in Chapter 12. The analog relations between the variables are given in Table 13.1.

Table 13.1: Similarities Between AGC loop and APC loop

AGC	APC
$G[V_C(s)]$	$G[i_{cs}(s)] = \eta[i_{cs}(s)] = \frac{\partial P[i_{cs}(s)]}{\partial i_{cs}(s)}$ In linear case it is slope efficiency
$g = \left.\frac{\partial G[V_C(t)]}{\partial V_C(t)}\right\|_{V_C=V_{CS}}$	$g = \left.\frac{\partial G[i_C(t)]}{\partial i_C(t)}\right\|_{V_C=V_{CS}}$
$K_D = \frac{\partial V_D(P)}{\partial P}$	$r[mA/mW] = K_{PD} = \frac{\partial I_{PD}(P_{OPT})}{\partial P_{OPT}}$ Responsivity
$P_{out}(s) = P_{in}(s) \cdot G[V_C(s)]$	$P_{out}(s) = i_{in}(s) \cdot G[i_C(s)]$
$H(s)$ Loop filter $T(s)$ Smoothing filter	$H(s)$ Loop filter $T(s)$ Smoothing filter

Figure 13.1 illustrates a typical APC loop. The laser bias current I_C is controlled by the base current I_B of Q_1. The transistor Q_1 is in its linear region bias point. Therefore, the collector current is given by

$$I_C(s) = I_B(s) \cdot (1 + \beta) \tag{13.1}$$

where the variable s refers to Laplace domain and β refers to the transistor DC hfe. The back-facet monitor photodetector samples the laser's optical power and generates an error current. The error current generates an error voltage across a load resistor. That voltage is sampled via a buffer unity gain amplifier and compared to a reference level on the noninverting port of the loop integrator operational amplifier. The result is an error voltage that is converted into an error current by the base resistor of Q_1. Sometimes a parallel feedback resistor is placed on the negative feedback of the operational amplifier of the integrator circuit in order to reduce the DC gain. However, that would reduce the loop accuracy since the finite gain of the integrator would create a residual error voltage between the inverting and noninverting ports of the integrator.

13.2 Thermo-TEC

TEC circuits are essential for having accurate wavelength transmissions without wavelength drifts to adjacent channels. Traditionally, coarse wavelength division multiplexing (CWDM) solutions are preferred to DWDM due to cost simplicity, power consumption, and equipment density. However, DWDM solutions provide maximum scalability in both channel count and channel distance. C band DWDM currently employs 44 channels that can be simultaneously amplified by low-cost erbium-doped fiber amplifier (EDFA), enabling the distance and BW required for extended metro area networks.[5] Recently, multisource agreement (MSA)-based transceivers, and especially pluggable MSA, had become the

de facto choice in system design. The most popular MSA is the SFP transceiver.[7] Recently, there was a report about the first subwatt hot pluggable DWDM SFP transceiver with wavelength stabilization using an optimized programmable TEC loop for an ITU grid of 100 GHz.[8]

As ITU wavelength grid spacing goes to 50 GHz, DWDM becomes denser. Thus, the TEC loop is essential in DWDM applications. TEC loops should be accurate and cheap. A more expensive way is to have wavelength locking by using a tunable laser or mode locking. This method requires larger-layout "real-estate." Wavelength control using TEC is similar to oven crystal oscillators (OCXO) where the oscillator is heated in order to maintain an accurate frequency.

13.2.1 TEC physics

The TEC module is a small solid-state device that operates as a heat pump. The principle was discovered in 1843 by Peltier.[4] The concept is that when electrical current passes through a junction of two different types of conductors, a temperature gradient is created. Therefore, the Peltier phenomenon requires that the semiconductor be an excellent electrical conductor and poor heat conductor. For instance, a Bismuth Telluride n type and p type are used as the semiconductor in a TEC. The TEC consists of p-type and n-type pairs connected electrically in series and sandwiched between two ceramic plates, preventing shorting of the laser by the TEC.[1,4] Extreme low temperatures can be achieved by cascading several TECs in series.[2]

Note that the semiconductor elements are connected in series electrically and parallel thermally.

The plates of the TEC of the hot side and the cold side are excellent thermal conductors. When the TEC is driven by a DC supply, the current creates a cold side and a hot side on the TEC. The cold side is exposed to the laser diode and the hot side to the heat sink, which transfers the heat to the environment. The dissipated heat is delivered to the hot side marked by Q_H. The removed heat from the laser is marked as Q_C. Therefore, the power equation is

$$Q_{\mathrm{H}} = Q_{\mathrm{C}} + I_{\mathrm{TEC}}^2 R, \tag{13.2}$$

where R is the TEC total resistance in ohms of the serial p-type and n-type elements and I is the TEC DC drive current. TEC coolers are used in butterfly laser packages and recently were used in small form factor (SFF) and SFP transceivers. Figure 13.2 shows a typical TEC structure. TEC operation can be analyzed by differential equations.[9,10,16]

$$\begin{cases} q_{\mathrm{p}} = \alpha_{\mathrm{p}} I \cdot T - k_{\mathrm{p}} A \dfrac{\mathrm{d}T}{\mathrm{d}x}, \\ q_{\mathrm{n}} = -\alpha_n I \cdot T - k_{\mathrm{n}} A \dfrac{\mathrm{d}T}{\mathrm{d}x}, \end{cases} \tag{13.3}$$

where α_{p} and α_{n} are the Seebeck coefficients in $\mathrm{WK^{-1}A^{-1}}$ of the p and n materials, k_{p} and k_{n} are their thermal conductivities in $\mathrm{Wm^{-1}K^{-1}}$, I is the TEC current, A is

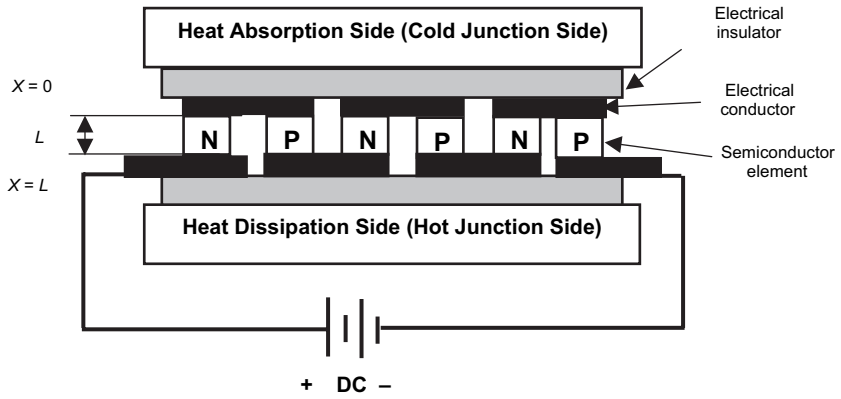

Figure 13.2: Typical cross section of a TEC module.

the semiconductor pellet cross sectional area, and T is temperature in Kelvin. The coefficient α_n is a negative quantity and the thermoelectric heat flow from the source through adjacent P and N branches, as shown in Fig. 13.2, is positive and is opposed to the thermal conduction.

Within the branches, the rate of heat generation per unit length ($\mathrm{Js^{-1}m^{-1}}$) from the Joule effect is given by

$$\begin{cases} -k_p A \dfrac{d^2T}{dx^2} = \dfrac{I^2\rho_p}{A}, \\ -k_n A \dfrac{d^2T}{dx^2} = \dfrac{I^2\rho_n}{A}, \end{cases} \tag{13.4}$$

where ρ_p and ρ_n are the electrical conductivities (Ω.m) of P and N, respectively. Assume that the branches length is L; then, the boundary conditions are $T = T_C$ at $x = 0$, and $T = T_H$ at $x = L$, which is the heat sink. Solving the pair of differential equations given in equation (13.4) results in[9]

$$\begin{cases} q_p = \alpha_p I T_C - k_p A \dfrac{k_p A(T_H - T_C)}{L} - \dfrac{I^2\rho_p L}{A}, \\ q_p = \alpha_n I T_C - k_p A \dfrac{k_n A(T_H - T_C)}{L} - \dfrac{I^2\rho_n L}{A}. \end{cases} \tag{13.5}$$

The cooling power Q_C at the sink is the sum of the two equations and is given by

$$Q_C = \alpha I T_C - K(T_H - T_C) - \frac{1}{2} I^2 R, \tag{13.6}$$

where $\alpha = \alpha_p - \alpha_n$ is known as the differential Seebeck coefficient of the unit. The thermal conductance K of the two parallel branches can be written as

$$K = \frac{k_p A}{L} + \frac{k_n A}{L} \tag{13.7}$$

and the electrical resistance is the series resistance on the N and P materials:

$$R = \frac{\rho_p L}{A} + \frac{\rho_n L}{A}. \tag{13.8}$$

Equation (13.6) demonstrates the cooling process by stating that the net cooling is the difference between the reversible cooling process, which is the first term, and the irreversible terms identified as thermal potential on the branches and ohm losses, which are the second and the third terms in equation (13.6). Using equation (13.8), the electrical power consumed in the P and the N branches can be written as

$$\begin{cases} P_p = \alpha_P I(T_H - T_C) + \dfrac{I^2 \rho_p L}{A}, \\ P_n = -\alpha_n I(T_H - T_C) + \dfrac{I^2 \rho_n L}{A}. \end{cases} \tag{13.9}$$

The total electric power is the sum of the power at p and n resulting in

$$P = \alpha I(T_H - T_C) + I \cdot R^2. \tag{13.10}$$

According to the first law of thermodynamics, the heat dissipated at the heat sink is the sum of equations (13.6) and (13.10), which results in

$$Q_H = \alpha I T_H - K(T_H - T_C) + \frac{1}{2} I^2 R \tag{13.11}$$

Equation (13.11) is the same as equation (13.2), when substituting equation (13.6). Having all the thermal and power relations, the system efficiency is examined by the refrigeration coefficient of performance (COP):

$$\mathrm{COP} = \frac{Q_C}{P} = \frac{\alpha I T_C - K(T_H - T_C) - \frac{1}{2} I^2 R}{\alpha I \cdot (T_H - T_C) + \frac{1}{2} I^2 R} > 1. \tag{13.12}$$

Maximum COP is accomplished at $\partial(\mathrm{COP})/\partial I = 0$, which results in optimum values for COP current and provides the TEC figure of merit:

$$\mathrm{COP}_{max} = \frac{T_C\left[\sqrt{1 + ZT_m} - T_H/T_m\right]}{(T_H - T_C)\left[\sqrt{1 + ZT_m} + 1\right]}, \tag{13.13}$$

where the figure merit of TEC is given by

$$Z = \frac{\alpha^2}{KR} \tag{13.14}$$

and T_m is the average temperature, which is given by

$$T_m = \frac{T_H + T_C}{2}. \tag{13.15}$$

13.2.2 TEC control types

Basically, there are two types of temperature controls: thermostatic and steady state. With thermostatic control, the thermal load is maintained between two temperature limits, for instance, 27–30°C. The system would continually vary between the two limits. The difference between the two limits is defined as the system hysteresis. This is done by switching the current to the TEC module.

Whenever a system must be maintained within tight limits, for example, a laser that should not drift above 0.05% of its wavelength, a continual temperature control should be considered. The system is locked on a set point temperature with very little variation around it. That means a feedback control loop is required by using a TEC controller. If the steady-state condition is suddenly disrupted by a sudden change in the ambient conditions, the control circuit will correct the system state and bring it back to its steady state by minimizing the error voltage created at the error amplifier or loop integrator. Figure 13.3 describes a system plot that is locked to 15°C by a proportional TEC controller. The proportional controller creates a correction voltage to power the TEC module, proportional to the error between the set point and the temperature sensor. This can be described in the Laplace domain as the output of the error amplifier by

$$[V_{\text{sens}}(s) - V_{\text{set}}]K_A = V_{\text{TEC}}(s). \tag{13.16}$$

It can be observed that there is a certain time to converge to the minimum required error voltage. In case the ambient temperature is higher than the set point and is increasing, the error voltage would increase. That would reduce the system accuracy. Generally, such controllers are not suitable for wavelength control and their temperature accuracy is tens of a degree. The conclusion is **Q1** that a proportional controller hardly amplifies the error voltage between the set

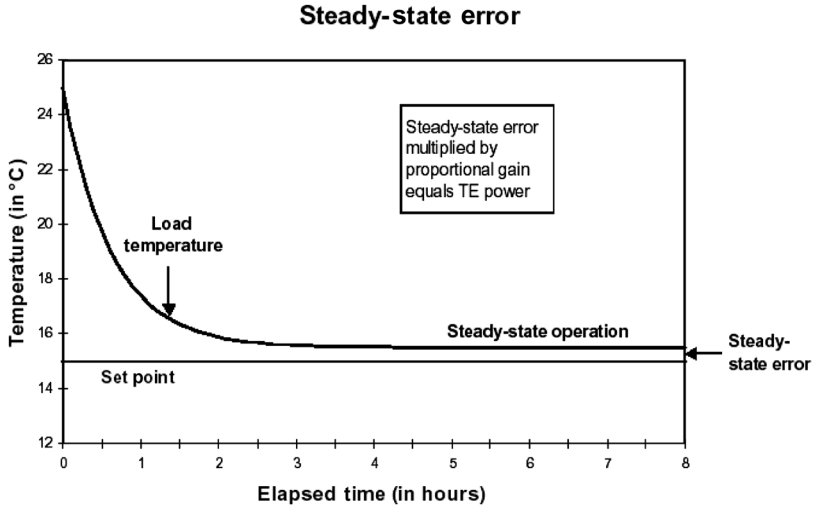

Figure 13.3: Steady-state error.

point and the temperature sensor. Hence, there is a need to increase the error amplifier gain, which is the loop integrator. Increasing the error amplifier gain would minimize the error voltage at its inputs and would increase the TEC loop accuracy. That, of course, would create overshoots and undershoots, causing oscillations around the temperature set point as demonstrated in Fig. 13.4.

As was explained in Chapter 12 about power control and AGC, feedback control system stability should be optimized to have sufficient phase and gain margin. A TEC controller that uses a proportional integrator amplifier is known as a "PI" controller. Unfortunately, such a feedback loop is not stable enough since it has a single pole at the origin; therefore, its phase margin response at zero crossing is not flat. An elaborated stability analysis theory was given in Sec. 12.2.4. Moreover, the PI TEC control system is useful only at steady state and it cannot stabilize the environmental fluctuations well enough. That disadvantage would result in fluctuations in the steady-state error voltage, as shown in Fig. 13.5. To overcome stability problems in a single integrator loop, a derivative amplifier is often employed to bring the feedback system parameters to a more optimal stable point.[12] The proportional amplifier at such a system controls the amount of change and the derivative amplifier controls the rate of change. This way, overshoot response is prevented. The derivative amplifier therefore operates as a charge pump. In case there is a large error due to a sudden thermal load change, the derivative amplifier would increase the current through the TEC. As the TEC gets closer to its set point, the derivative amplifier would reduce its current to the TEC, preventing overshoot and ringing. The higher the gain of the derivative amplifier, the greater would be its instantaneous response to change. There is a certain amount of maximum gain utilized by the derivative amplifier. It should compensate sudden disruptions but not overcompensate the system and bring it to oscillations. A controller that uses both a proportional integral amplifier and a derivative amplifier is called a proportional integral derivative (PID). This is the most common steady-state temperature controller.

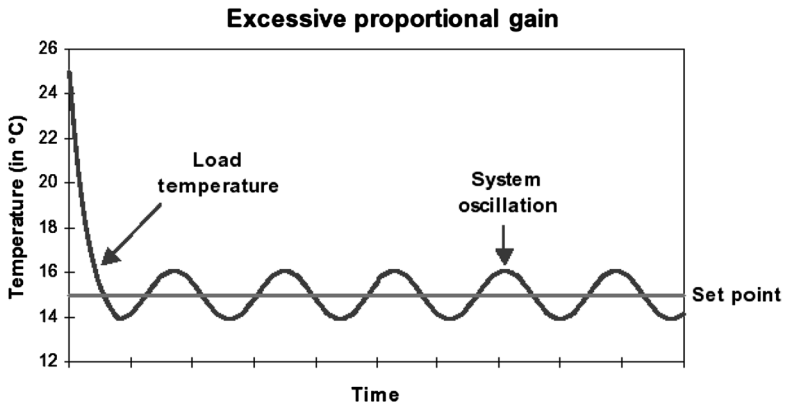

Figure 13.4: TEC oscillation of PI TEC control system due to nonstability caused by very high gain of the error amplifier.